Doc. No. 6532-E64242 Rev.1

INSTRUCTION MANUAL

MULTI-STAGE DRY VACUUM PUMP

A150W-M

ISSUED BY PRECISION MACHINERY GROUP

EBARA

EBARA CORPORATION

Do not reproduce or reprint any portion of this manual without permission.
Manufacturer reserves the right to discontinue or change any specifications or designs without notice and without incurring obligations.

1995 All right reserved, copyright EBARA corporation.

Record of changes

Rev.	Date	Page	Position	Contents	Reason
0	24-Apr-96			New issued	
1	23-Feb-99	18,19	5.3.3 Operation mode Tab 5.5 , (1)(6)	Add dip switch No.1 No.7	

Safety Information

The user of the pump should be aware of the hazardous states of the pump in order to prevent the accidents.
Inadequate or rash operations may cause a dangerous and serious accidents.
Before installation and operation, the operators should first get knowledge of the pump construction, operation procedure, as well as hazards.
The operators should read in detail this instruction manual and other documents issued by EBARA.
If you have any questions as to the operation procedure, security, maintenance or the like, contact EBARA directly.

Three words designating a level of hazard seriousness are used in this manual.

[DANGER] : indicates an imminently hazardous situation which, if not avoided, will result in death or serious injury.

[WARNING] : indicates a potentially hazardous situation which, if not avoided, could result in death or serious injury.

[CAUTION] : indicates an imminently hazardous situation which, if not avoided, may result in minor or moderate injury.
It is also permitted for property-damage-only accidents.

Important Prior Warnings

[DANGER] Keep out from under the lifted pump.
Only qualified personal shall be allowed to lift the pump.

[WARNING] Be careful not to overturn the pump when pushing and pulling it sideways, because the width of the pump is small compared with the length.

[WARNING] All electrical works must be performed by a qualified electrician.
All national and local electrical codes must be observed.

[WARNING] Turn power off before starting any work or maintenance.
Do not supply power until work is completed.

[WARNING] Supply N2 gas to the exhaust piping when it is necessary to dilute the inflammable or toxic gas up to safe density.

[WARNING] Do not touch the pump casing and exhaust piping during operation and for some time after stop.
The inflammable must not be touched.
The pump casing and exhaust piping heat very hot.
Do not remove the pump cover during operation.

[WARNING] Purge sufficient N2 gas before vacuum or exhaust piping removal and washing.
Do not permit inflammable, toxic or dangerous materials to disperse to the surroundings and guard against contact to the human body.
Emergency exit from work site should be provided.

[WARNING] Do not use the pump for another process without overhaul.
The accident happens or a large amount of product is produced by remaining gas or products inside the pump.

[WARNING] Check for the gas leakage after installing and maintaining the piping.
Discharge of harmful and dangerous substances and abnormal reaction happens by gas leakage.

[WARNING] Do not alter the pump member nor change any parts without the EBARA's consent or approval.

[CAUTION] Dispose of process by-product should be in accordance with all local and national environmental and safety codes.

[CAUTION] Dispose of Printed circuit board containing Lithium battery should be in accordance with all local and national environmental and applicable codes.

CONTENTS

Record of Changes	(i)
Safety Information	(ii)
Important Prior Warnings	(iii)
Contents (This List)	(v)
1. Introduction	1
2. Unpacking Check	1
3. Storage	1
4. Product Description	2
4.1 Outline	2
4.2 Control System	3
4.3 Detailed specifications	3
5. Installation	10
5.1 Location	10
5.2 Piping	11
5.3 Electrical Wiring	14
6. Operation	20
6.1 Before Starting	20
6.2 Operation	23
6.3 Trap Temperature Alarm Setting	25
7. Maintenance and Overhaul	26
7.1 Routine Inspection	26
7.2 Piping Maintenance	27
7.3 Exhaust Trap Maintenance	28
8. Removal and Transportation	29
9. Troubleshooting	31
9.1 Basic Trouble	31
9.2 Alarm	33
9.3 Trip	36

1. Introduction

We appreciate that you have selected an EBARA A-series dry vacuum pump. This pump has been manufactured with a great deal of care and attention so that it may be operated safely and satisfactorily.
However, incorrect operation may cause accidents and injuries to personnel.

[NOTE] This instruction manual contains necessary information regarding the installation, operation, maintenance and other handling of the pump. Operate the pump correctly as instructed and it may obtain a long service life.
Keep this instruction manual on hand for future reference.

2. Unpacking Check

Check following items on receipt of the pump package.
(1) Check the nameplate attached to the pump cover to confirm it is as ordered.
(2) Check the accessories against packing list and the previously submitted drawings and documents to confirm that all the ordered accessaries have been received.
(3) Check for any damage witch may have occurred during shipment.

[CAUTION] Notify EBARA at once when damage is discovered or there are missing components.

3. Storage

(1) Store the pump in a dry and clean environment if it do not installed at once after delivery.
Temperature : 5 - 40 deg C
Humidity : 80 % or less
(2) Do not stack the pump
And pump must be placed in upright position.

4. Product Description

4.1 Outline

A-series pump has a compact design and includes various sensors and controls to enhance reliability and operation.

4.1.1 Pump module

The pump is a roots type vacuum pump witch rotates the non-contact multi-stage rotor of the couple which synchronized by timing gears. The booster pump (BP) and main pump (MP) are connected in a series in the unit.

The timing gears and bearings are enclosed in a compartment independent of the rotor casing. And They are lubricated with Perfluoro-Polyether (PFPE) oil.

This pumps are factory filled with lubrication oil. Use the recommended lubrication oil shown in specification table when replenishing or replacing oil.

4.1.2 N2 gas

The pump casing is free from lubrication oil by introduction of N2 gas to shaft seal to provide a clean vacuum.

Moreover, to decrease pump corrosion by the process gas or pile up of reaction by-product, N2 gas is supplied to each pump component as dilution purge gas.

These two kinds of purges supply a proper amount by connecting to the N2 gas service and adjusting the regulator pressure to a specified value.

4.1.3 Cooling water

Because the pump compresses gas from a vacuum to atmospheric pressure, compression heat is generated.

Therefore, cooling water should be supplied through the motor and gas coolers.

Cooling water is supplied through coupler to facilitate connection.

Coupler is a quick connecting and self sealing type.

4.1.4 Exhaust

To prevent reverse flow of gas from the exhaust through the pump to the vacuum chamber when pump is stopped, a check valve is provided.

4.2 Control system

A-series dry vacuum pump is provided with an earth leakage breaker (ELB), motor starters and a control circuit.

Moreover to improve reliability and safety, the condition of each utility and pump section is monitored by a sensor.

The pump is operated by monitoring power supply, cooling water flow, N2 gas flow, lubrication oil level, motor current and suction pressure.

Continuous operation is possible when there is a momentarily power failure of 0.5sec or less.

4.2.1 Warning

Warning consists of two steps of ALARM and TRIP as a pump protection system with improves reliability of the evacuation system.

ALARM signal means that the pump is not normal but an imminently hazardous situation exists.

Under such situation, the pump operates continuously and the ALARM signal is output.

When the pump operation reaches the safety limits, the pump automatically stops and TRIP signal is output.

When the ALARM signal is output during pump operation, the pump can be checked after process for one cycle is ended.

Therefore, suddenly process stopping while operating the pump is avoidable.

4.2.2 Monitoring of operating condition

As sensor information is displayed on LCD controller, daily inspection are facilitated.

Various ALARM and TRIP signals are also displayed on LCD.

Two kinds of remote ALARM and TRIP signals, individual and collective, make remote pump operation and observation possible.

4.3 Detailed specifications

Refer to the following tables and figures for detailed specifications, size, and pump performance.

Table 4.1 Specification

Model		A150W-M
Pumping Speed (50 / 60 Hz)		15000 / 18000 L/min
Ultimate Pressure (50 / 60 Hz)		0.53 / 0.53 Pa (4x10-3 / 4x10-3 Torr)
Connection	Gas Inlet	ISO160
	Gas Outlet	NW50
Motor		2P 3.7kW + 3.7kW
Cooling Water	Connection	Coupler (Rc3/8)
	Pressure [Gauge Press.]	Supply : Max. 0.4MPa (4 kgf/cm2) Differential : 0.15MPa (1.5 kgf/cm2)
	Flow Rate	Min. 3.5 L/min
	Temperature	Max. 30 deg C
N2 Gas	Connection	3/8" Tube Connector (Same as Swagelok)
	Pressure [Gauge Press.]	Supply : 0.15-0.7 MPa (1.5 - 7 kgf/cm2) Setting : 0.1 MPa (1 kgf/cm2)
	Approx. Flow	Pump N2 : 30 Pa m3/s (18 SLM) Exh. N2 : 30-300 Pa m3/s (18-180 SLM)
Duct Ventilation	Connection	JIS 5K 100A x L 65 mm
	Pressure	-198 Pa (-20mmAq)
	Approx. Flow	0.5 m3 / min
Lubrication Oil	Brand	FOMBLIN Y-L VAC 25/6 BARRIERTA J100 DEMNUM S-65 KRYTOX VPF 1525
	Quantity	1.4 L
Approx. Weight		500 kg
Power Supply	Ph / V / Freq.	3 Phase, 200V (50Hz), 200-220V (60Hz)
	Current Rating	36.1 / 34.5 A (50 / 60 Hz)
	Connection	MS Series 22 - 22 (Japan Aviation Electronics Industry)
Control Signal		57 Series 50 (DDK. Ltd)

[Note] Exhaust dilution N2 flow shall be adjusted by purge meter in accordance with customer's safety standards.
LCD controller displays only the flow rate of pump N2.

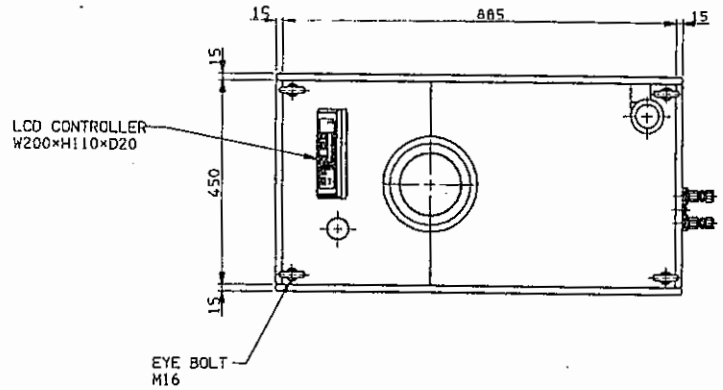

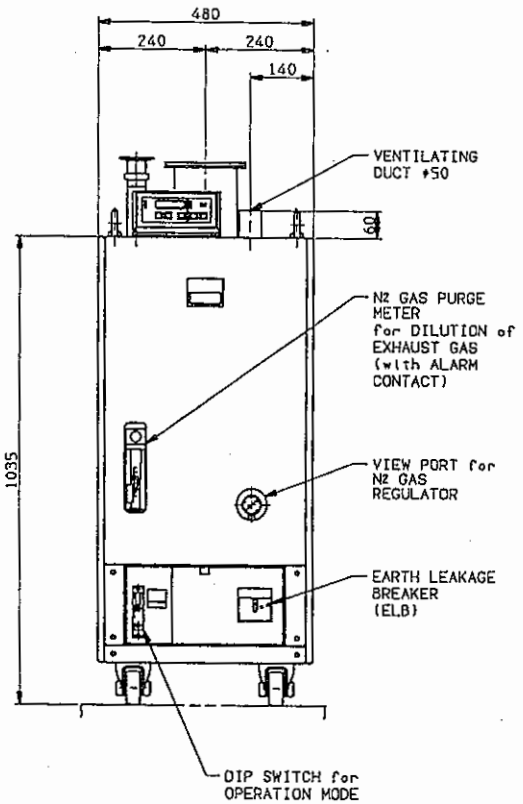

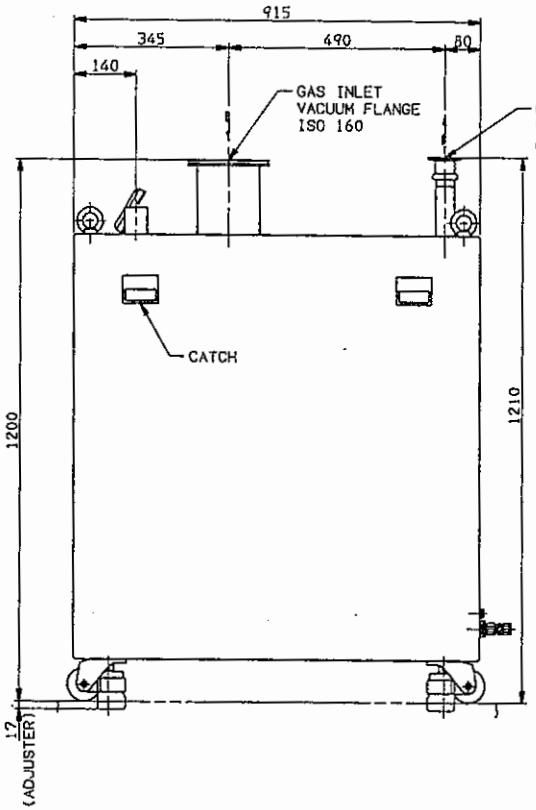

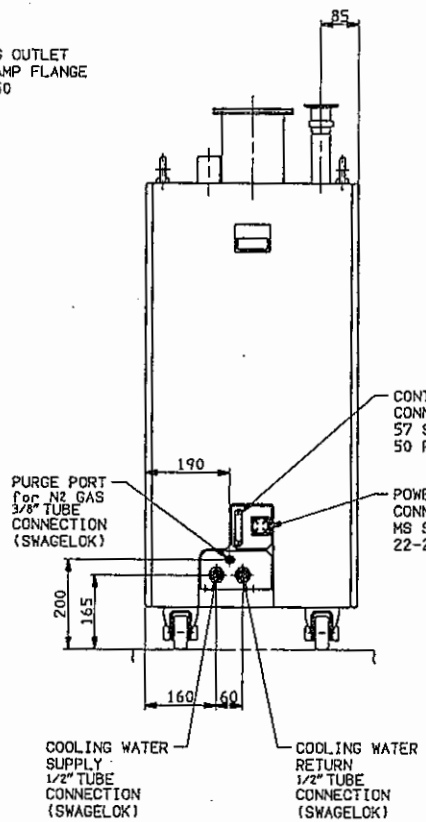

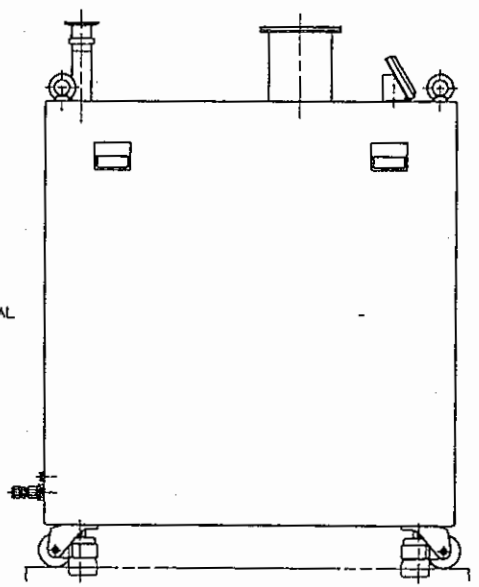

MODEL	A150W-H	CUSTOMER	
DRAWN BY	CHK'D BY	TITLE	MULTISTAGE DRY VACUUM PUMP OUTLINE DRAWING(1)
APP'D BY		SCALE	1:6
EBARA CORPORATION		DWG. No.	W8/9515305
		REV.	

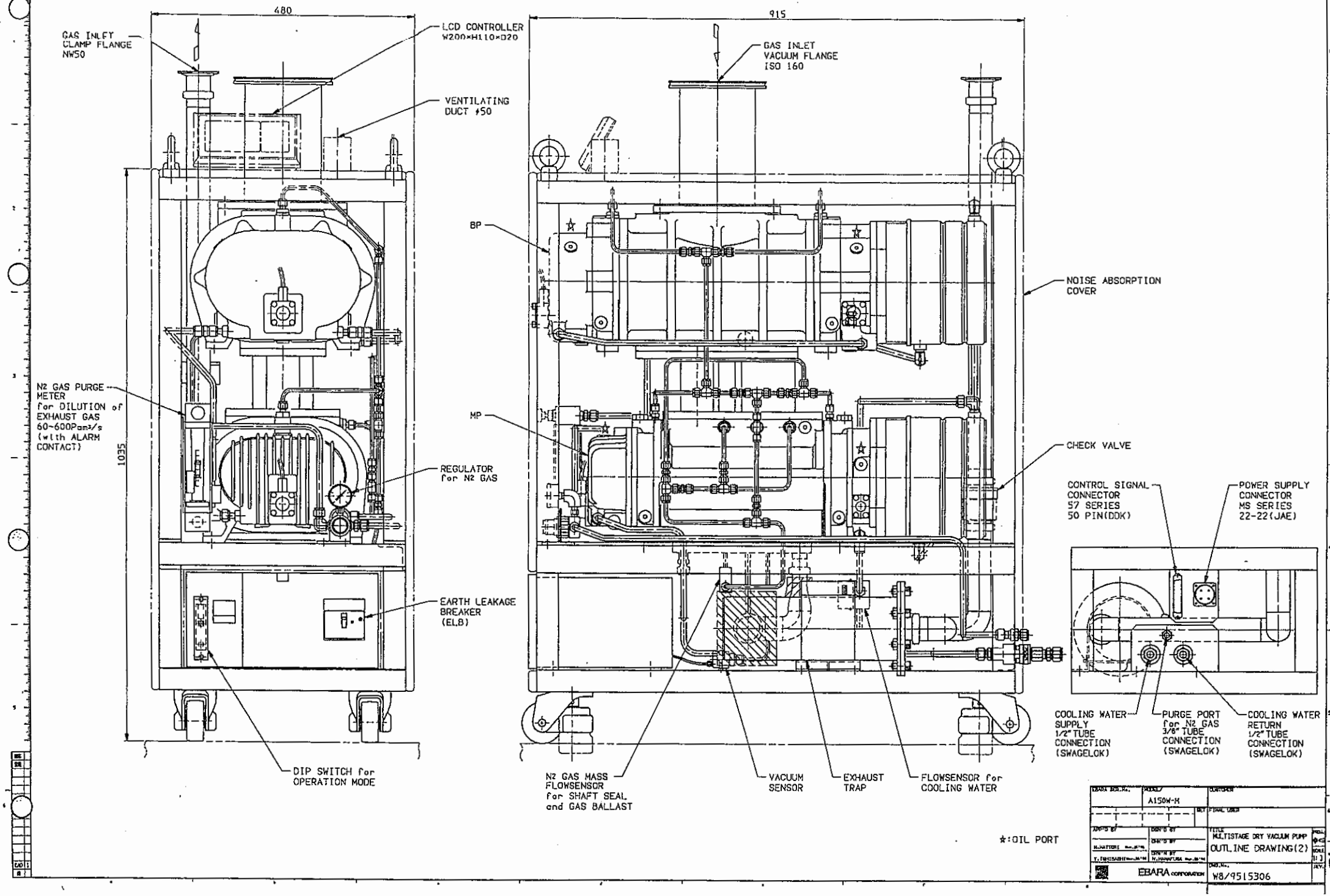

480
915
GAS INLET CLAMP FLANGE NW50
LCD CONTROLLER W200×H110×D20
VENTILATING DUCT ϕ50
GAS INLET VACUUM FLANGE ISO 160
BP
NOISE ABSORPTION COVER
N2 GAS PURGE METER for DILUTION of EXHAUST GAS 60~600Pam³/s (with ALARM CONTACT)
1035
MP
CHECK VALVE
REGULATOR for N2 GAS
CONTROL SIGNAL CONNECTOR 57 SERIES 50 PIN(DDK)
POWER SUPPLY CONNECTOR MS SERIES 22-22(JAE)
EARTH LEAKAGE BREAKER (ELB)
COOLING WATER SUPPLY 1/2" TUBE CONNECTION (SWAGELOK)
PURGE PORT for N2 GAS 3/8" TUBE CONNECTION (SWAGELOK)
COOLING WATER RETURN 1/2" TUBE CONNECTION (SWAGELOK)
DIP SWITCH for OPERATION MODE
N2 GAS MASS FLOWSENSOR for SHAFT SEAL and GAS BALLAST
VACUUM SENSOR
EXHAUST TRAP
FLOWSENSOR for COOLING WATER
☆:OIL PORT
A150W-H
MULTISTAGE DRY VACUUM PUMP
OUTLINE DRAWING(2)
EBARA CORPORATION
W8/9515306

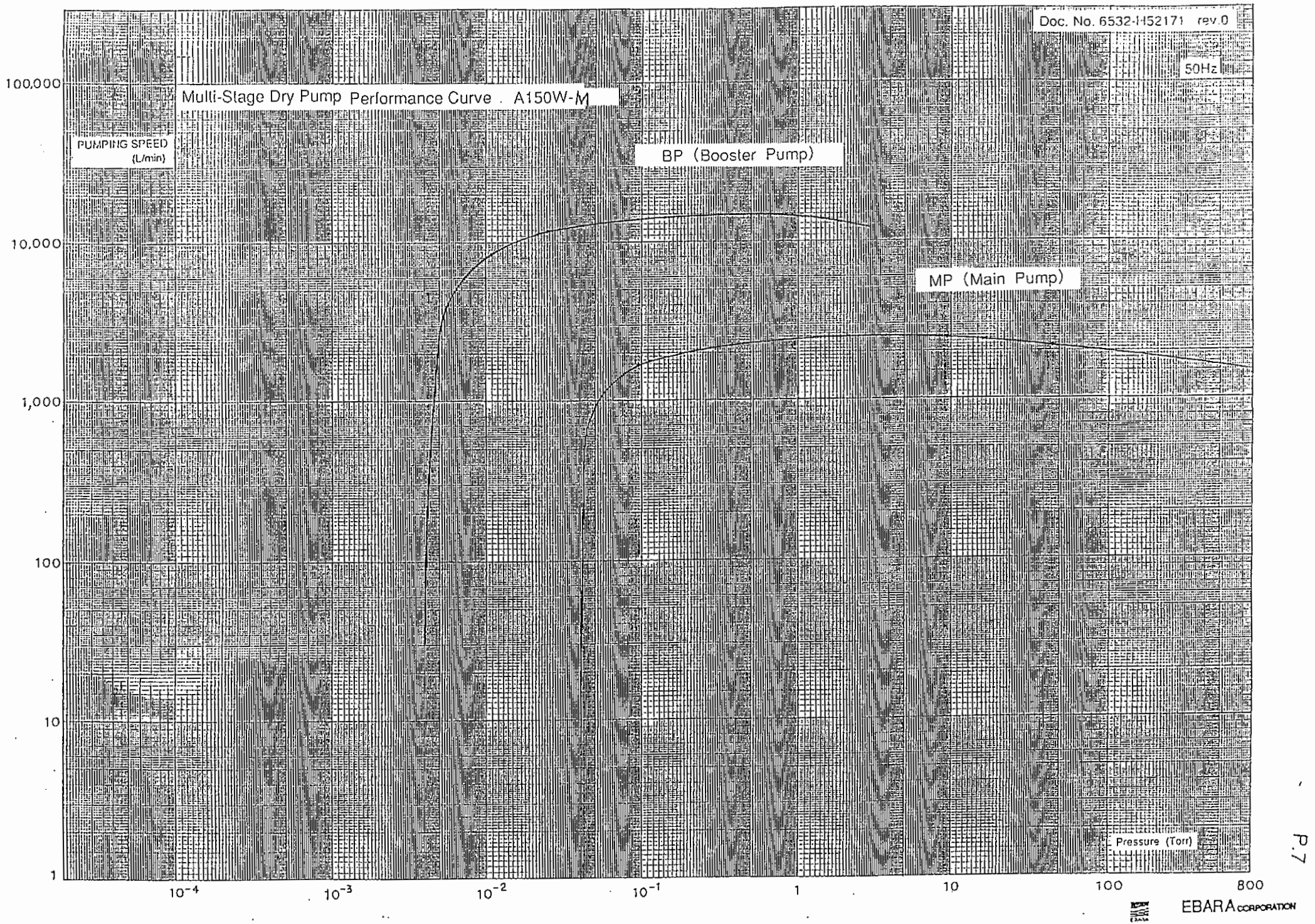
Doc. No. 6532-H52171 rev.0
50Hz
Multi-Stage Dry Pump Performance Curve A150W-M
PUMPING SPEED (L/min)
BP (Booster Pump)
MP (Main Pump)
100,000
10,000
1,000
100
10
1
10^{-4}
10^{-3}
10^{-2}
10^{-1}
1
10
100
800
Pressure (Torr)
EBARA CORPORATION

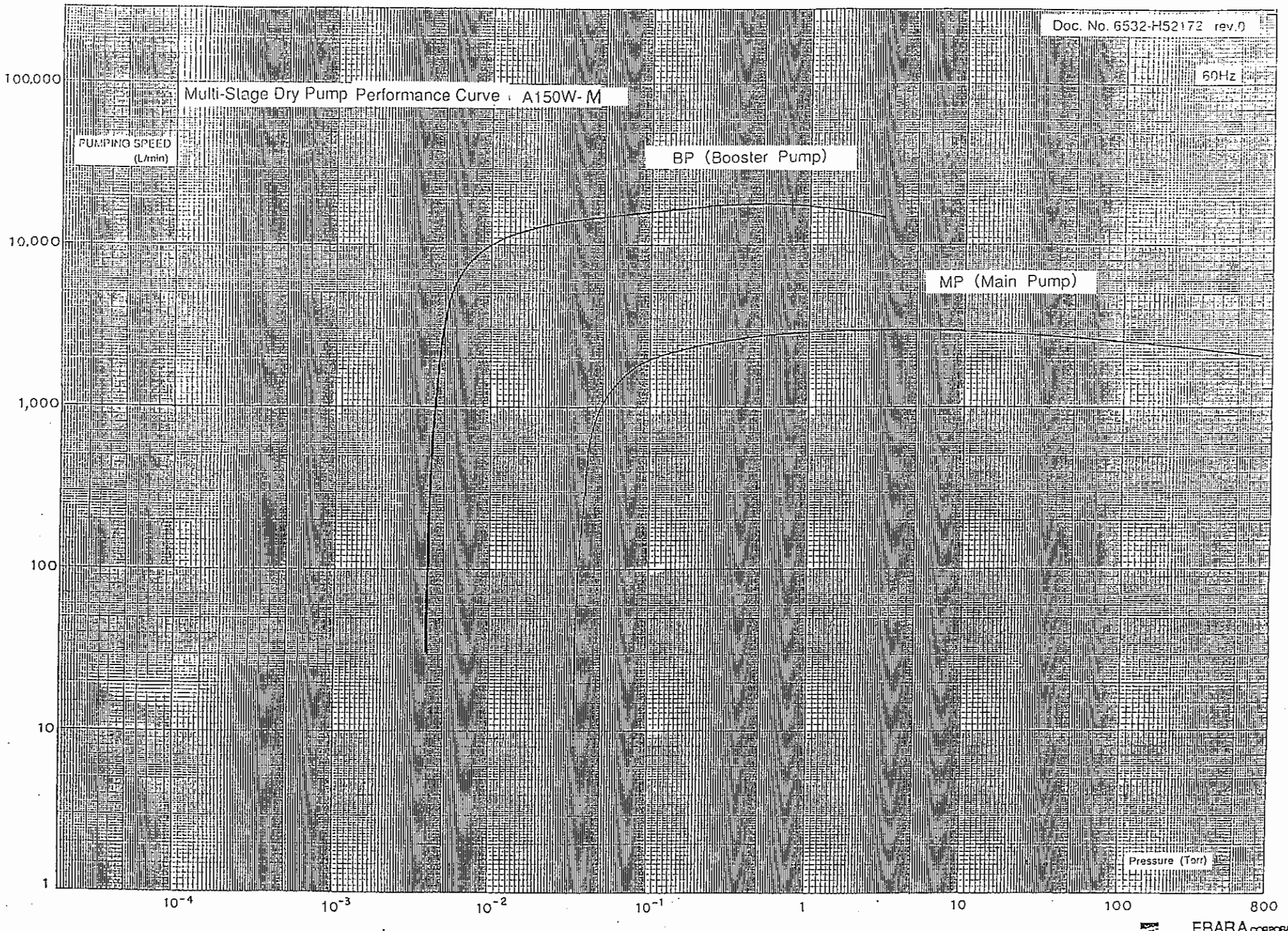

EBARA CORPORATION

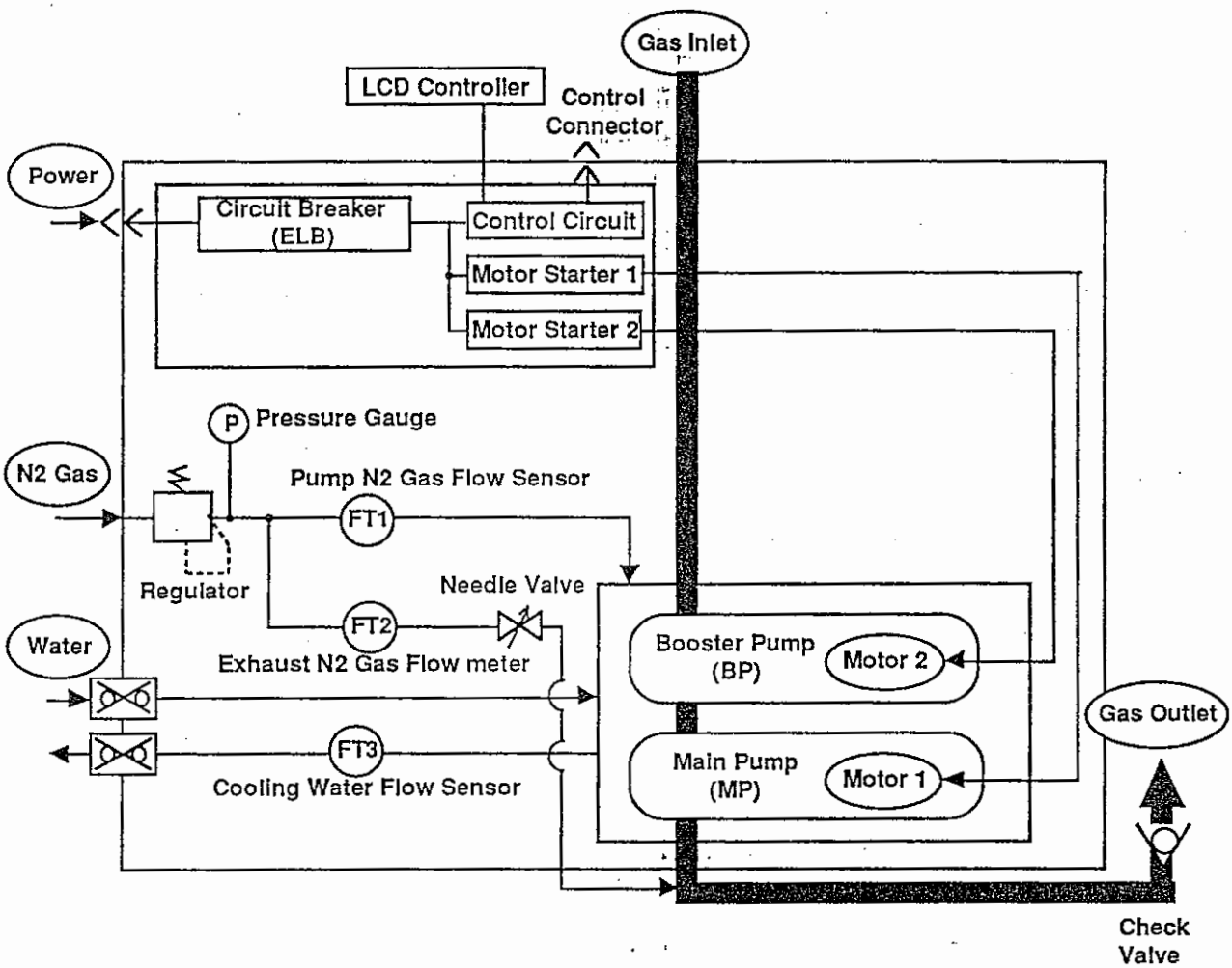

Figure 4.2 System flow

5. Installation

5.1 Location

Pay particular attention to the following points during installation as the vacuum pump is precision machine.

(1) The pump should be installed indoors.

The pump should be installed at a site free from dust and where ambient humidity does not rise to a level that causes dew condensation.

The pump should be installed at a site where the installation and maintenance work can be easily accomplished.

[CAUTION] Ambient temperature of the pump site must be 30 °C or less. Care should be taken especially when operating in a totally sealed environment.

[CAUTION] Provided 50 mm or more of the space between the pump cover and equipment.

(2) Four casters and adjuster feet are provided as one unit under the pump frame.

Raise all adjuster feet fully when moving the pump.

Turn counterclockwise to raise the adjuster feet.

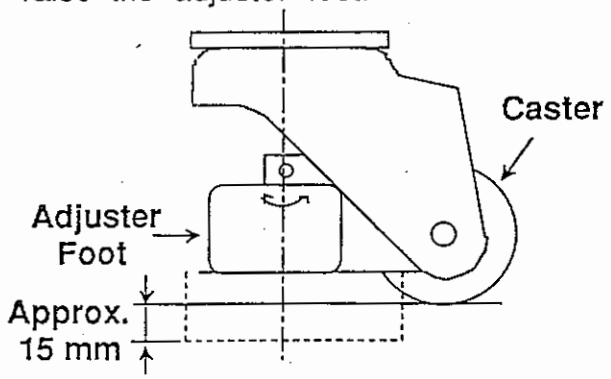

Figure 5.1 Caster

[WARNING] Be careful not to overturn the pump when pushing and pulling it sideways, because the width of the pump is small compared with the length.

[CAUTION] The casters turn right and left when moving.
Be careful of fingers or toes when moving pump.

[CAUTION] Do not step on the pump and do not place any objects on the pump.

(3) Turn clockwise to lower the adjuster feet and fix the pump.
Adjust the height of the adjuster feet to level the pump with a difference within 1 mm at both ends of the frame.
The adjustment allowance is approximately 15 mm.

[NOTES] Oil Level decrease ALARM can put out If the pump is not evel.

[NOTES] If the adjuster feet is not used, vibration on the floor increases.

5.2 Piping

5.2.1 Vacuum and Exhaust Piping

Connect vacuum piping to the gas inlet and exhaust piping to gas outlet.
The rotors turn keeping a tight clearance.
Therefore operation is impossible when any foreign object enters in the pump, the following items should be observed when connecting piping.
(1) Remove completely any foreign objects.
(2) Remove dirt and dust on flange surfaces and do not damage the flange surface.
(3) Install an appropriate filters so that neither the product from the APC valve nor pieces of wafer, etc. can enter.
(4) Support piping sufficiently. When imposed loads on the piping, misalignment or leakage will be caused.
Do not connect the piping forcibly.
Use a flexible bellows for connection to the gas inlet and outlet.
The length of flexible bellows on vacuum side varies according to vacuum.
Connect the piping so excessive loads may never be imposed on the bellows.

[WARNING] Check for the gas leakage after installing and maintaining the piping.
Discharge of harmful and dangerous substances and abnormal reaction happens by gas leakage.

[NOTES] Exhaust noise increases, when the exhaust outlet is open to atmosphere or when exhaust piping is commonly connected to ventilating duct and causes resonance. An optional silencer is available for your kind consideration.

5.2.2 Cooling Water Piping

(1) Connect the cooling water service correctly to supply port and return port. Coupler is provided at cooling water connection. When removing the coupler, water automatically stops.
Cooling water must be of same quality shown in Table 5.1.

Table 5.1 Recommended water quality for industrial use

Turbility	ppm	20
pH		6.5-8.0
Alkalinity	ppm	75
Hardness	ppm	120
Evaporation residue	ppm	250
Chlorine ion	ppm	80
Iron	ppm	0.3
Manganese	ppm	0.2

[CAUTION] Select water piping material which can withstand 70 °C or more under the applicable working pressure.
Pump continues operation until the temperature of each component reaches the safety limits even if cooling water decreases.

[CAUTION] When using pumps two or more, connect the water piping in parallel.
Cooling water to each pump may vary by the model.
Therefore, connect the pipes so that proper flow rate is supplied to all pumps.

[CAUTION] When connecting supply port and return port of cooling water in reverse, a flow rate different from normal is displayed and pump will be not cooled normally.

[CAUTION] When cooling water is kept flown during pump stopping in a place with much humidity, the dew condensation will occur on water-cooled part and electrical equipment might break.
Stop cooling water when dew condensation is found on water supply piping while pump stops.

5.2.3 N2 Gas Piping

(1) Connect the fully annealed stainless steel tube to the N2 gas purge port. Use the tube that ends cut squarely and remove the burr.
(2) Insert the tube until the tube end against the shoulder of fitting body.
(3) Tighten the nut until "finger-tight" position and then tighten an additional 1+1/4 turns with wrench. Hold fitting body with second wrench to prevent body from turning.
(4) In re-connection using the tube which the ferrule has already fitted, re-tighten the nut by hand and then rotate the nut with a wrench to the original position. Then tighten an additional 1/12 turn past as original position.

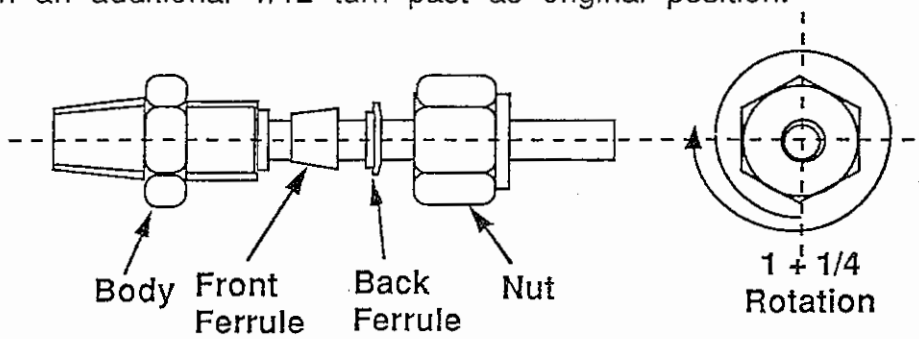

Figure 5.2 Tube Fitting Assembly

5.2.4 Ventilation

Connect duct piping to the ventilating duct located on top of the pump cover. Draw the hot air from inside the cover.
If ventilated not properly, temperature inside the cover rises and troubles or ALARM may occur.

[CAUTION] Duct ventilation should be provided for safety, if the pump evacuate toxic or inflammable gases.

[CAUTION] Do not connect duct ventilation with any process gas exhaust.

5.3 Electrical Wiring

[WARNING] Turn power off before starting any work or maintenance. Do not supply power until work is completed.

[WARNING] All electrical wiring works should be in accordance with local and national regulations, cords, ordinances.

[WARNING] All electrical works must be performed by a qualified electrician.

[WARNING] Do not supply power from the pump to another equipment to avoid malfunction of control circuit or failure of the pump.

5.3.1 Power Supply Wiring

[CAUTION] Use appropriate wiring materials in accordance with electric power of pump.

[CAUTION] Be sure to the grounding wiring is connected.

[CAUTION] Wiring should be hard-wired or using twist-lock hubbel connector at power source side.

Connect commercial power supply (3 phase , 200 V at 50Hz , 200-220V at 60Hz) to the pump power connector.
Refer to Figure 5.3 and Table 5.2 for connector specifications and the connector pin assignment.

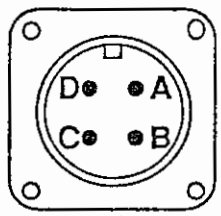

Figure 5.3 Power Supply Receptacle
(Face of receptacle represented)

Table 5.2 Power Supply Receptacle

Recep. manufacturer	Japan Aviation Electronics Industry Co.,Ltd.
Receptacle type	JA3102A22-22P
Voltage , Frequency	3 phase, 200V (50Hz) / 200-220V (60Hz)
Current (50 / 60 Hz)	36.1 / 34.5 A
Adapted plug type	MS3106B22-22S
Suitable wire	AWG 8

Pin assignment

No.	Phase
A	L1(R)
B	L2(S)
C	L3(T)
D	PE

5.3.2 Control Signal Wiring

Connect the wire to the control connector when operating by remote or observing.
Refer to Figures 5.4, 5.5 and Table 5.3 for connector specifications and the connector pin assignment.

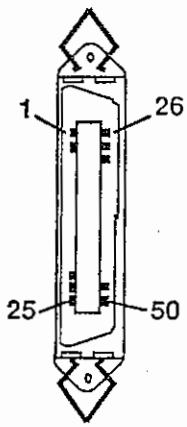

Figure 5.4 Control Signal Receptacle
(Face of receptacle represented)

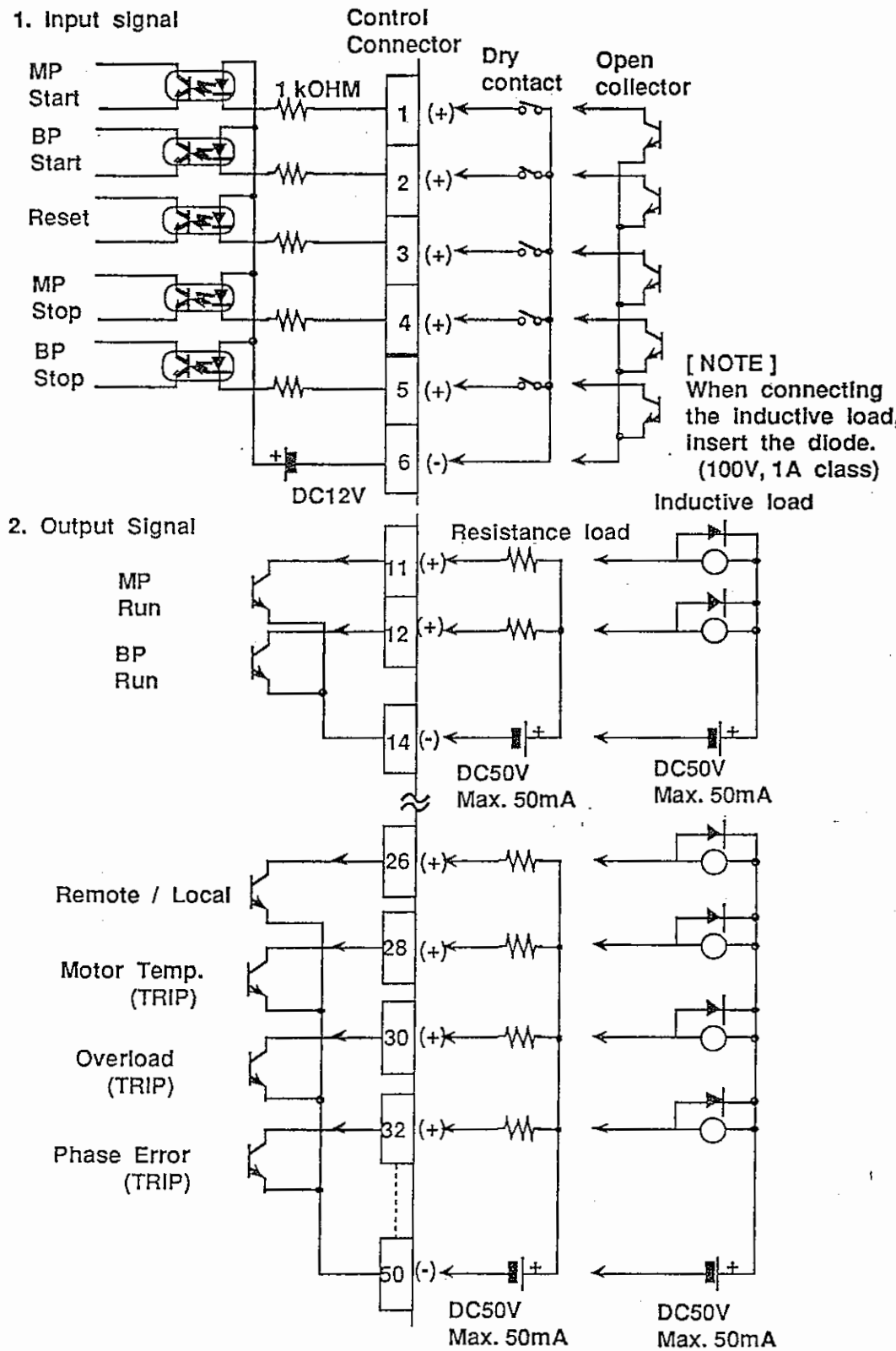

Figure 5.5 Control Signal Connection

Table 5.3 Control Signal Receptacle

Receptacle manufacturer	DDK. Ltd.
Receptacle type	57FE-40500
Applied voltage for Input	12 VDC 20 mA
Contact capacity of output	50VDC / Max.50mA
Adapted plug type	57-30500
Suitable wire	AWG 24

Table 5.4 Pin assignment

No.	Signal name	I / O	Signal type	No.	Signal name	I / O	Signal type
1	MP Start	IN	N.O.,Alternate	26	REMOTE / LOCAL	OUT	N.O.,Alternate
2	BP Start	IN	N.O.,Alternate	27	Casing Temp. (TRIP)	OUT	N.O.,Alternate
3	ALARM/TRIP Reset	IN	N.O.,Momentary	28	Motor Temp. (TRIP)	OUT	N.O.,Alternate
4	MP Stop	IN	N.O.,Momentary	29			
5	BP Stop	IN	N.O.,Momentary	30	Overload (TRIP)	OUT	N.O.,Alternate
6	COM of 1 - 5	IN		31	---		
7				32	Phase Error (TRIP)	OUT	N.O.,Alternate
8				33			
9				34			
10				35			
11	MP Operation	OUT	N.O.,Alternate	36	Trap Temp. (ALARM)	OUT	N.O.,Alternate
12	BP Operation	OUT	N.O.,Alternate	37	Water Flow (ALARM)	OUT	N.O.,Alternate
13				38	Pump N2 Flow (ALARM)	OUT	N.O.,Alternate
14	COM of 11 - 12	OUT		39	Exh. N2 Flow (ALARM)	OUT	N.O.,Alternate
15				40	Casing Temp. (ALARM)	OUT	N.O.,Alternate
16				41	MP Current (ALARM)	OUT	N.O.,Alternate
17				42	BP Current (ALARM)	OUT	N.O.,Alternate
18				43	Oil Level (ALARM)	OUT	N.O.,Alternate
19	TRIP/Collective	OUT	N.C.,Alternate	44			
20	COM of 19	OUT		45			
21				46			
22	ALARM/Collective	OUT	N.C.,Alternate	47			
23	COM of 22	OUT		48			
24				49			
25				50	COM of 26 - 43	OUT	

[NOTE]

* MP means Main Pump and BP means Booster Pump.
* External start / stop signal type can be selected by Dip-SW No. 5.
  Off : Alternate signal (Use only pins 1 and 2)
  On : Pulse signal (Use pins 1 and 2 for start and pins 4 and 5 for stop
  Pins 1 and 2 are changed to momentary signal)
  Pump operation into remote mode can be selected "According to signal"
  or "Automatically stop" by Dip-SW No. 4.
* Input 200 ms or more to pin 3 (ALARM / TRIP Reset)
* Cooling water and N2 gas observation can be selected "always"
  or "operating period only" by Dip-SW No. 2.
* Trap temp observation can be selected by toggle switch on control panel.

[CAUTION] Do not apply voltage on the equipment side for the input signals.
12 VDC is already applied on the pump side.
Output signals are open collector output.
Apply 50 VDC or less on the equipment side.

[CAUTION] Ensure the polarity (Sig./Com.) of each signal is correct.

[CAUTION] Insert a diode (100V / 1A class) for surge absorber when connecting inductive load such as relay by output signal.

5.3.3 Operation Mode

Set the dip switch on the opening of control panel in accordance with the working conditions as shown in Table 5.5.

Table 5.5 DIP Switch Settings

No	Mode	Off	On
1	RS232C Data Length	7bit	8bit
2	Service observation	Always	Running period only
3	Buzzer	Not used	Use
4	Operation switched to remote	According to signal	Automatically stop
5	Remote start signal	Alternate(Maintained)	Pulse (Momentary)
6	———	———	———
7	Exhaust dilution N2	with dilution	without dilution
8	BP operation	Automatic	According to signal

(1) In case of observing pump running status with RS232C communication port, Data Length can be selected out of 7bits and 8bits.
(2) Cooling water and N2 gas observation can be selected either "always" or "running period only" by dip switch No.2.
When selecting "running period only", cooling water observation continues for 15 min. after stopping the pump.
(3) Buzzer usage in ALARM / TRIP condition can be selected by dip switch No.3.
(4) Pump operation switched into remote mode can be selected either "According to start/stop signals" or "Automatically stop" by dip switch No.4.

(5) External start/stop signal type can be selected either "Alternate (Maintained) signal" or "Pulse (Momentary) signal" by dip switch No.5.
1-2 pins are changed to pulse (momentary) signal port when dip switch No.5 is ON.
(6)Exhaust dilution N2 usage can be selected by dip switch No.7.
When process whitch does not need exhaust dilution N2, N2 gas consumption can be saved. Shut the valve-handle located on N2 purge meter and turn dip switch No.7 ON.
(7) Booster pump (BP) can automatically start and stop according to inlet vacuum. When operating BP by external signal at vacuum condition, turn dip switch No.8 ON.
(8) The setting at shipping are : Data Length 8bits, always observation, buzzer in use, according to signal, alternating signal, with dilution, BP automatic operation, and Local operation by toggle switch. Refer to figure "Operation Mode Switches".

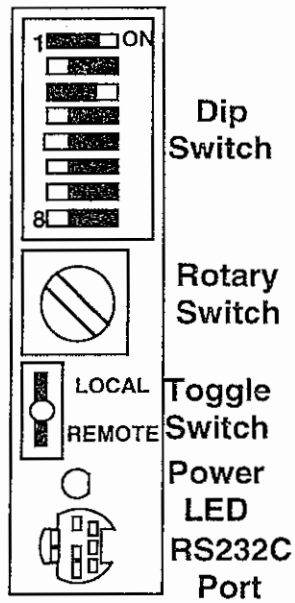

Figure 5.6 Operation Mode Switches

5.3.4 Exhaust Trap Temperature observation

When installing exhaust trap , turn trap temprerature toggle switch ON.
When not installing exhaust trap , turn trap temperature toggle switch OFF.
For temperature ALARM setting , refer to chapter 6.3.

6. Operation

6.1 Before Starting

(1) Turn on the cooling water flow and check out piping for water leakage.

[CAUTION] Supply cooling water appropriately, insufficient water flow causes trouble such as rotor contact due to rise of temperature.

[NOTE] Flow control valve is not provided in pump unit.

(2) Turn on the N2 gas flow.
Be sure that the N2 gas regulator attached to the pump is fully closed. (Turn regulator knob fully counterclockwise.)
Open the main valve and check out piping for N2 gas leakage.
Turn slowly the regulator knob clockwise and set the regulator pressure for 0.1 MPa (1.0 kgf/cm^2).
Push the red stopper of knob to lock after setting.

[WARNING] Adjust exhaust dilution N2 gas by purge meter in accordance with customer's safety standards.

[CAUTION] Set flowrate appropriately, otherwise such troubles as oil back, corrosion inside pump, deposit of by-products, etc. occur.

(3) Turn on power.
(4) Turn on the ELB (Earth Leakage Breaker) and ensure the yellow LED located beside dip switch lights.
The LCD controller counts down 10 seconds.
Refer to Table 6.1.

[NOTE] After turning on power, pump can not be start for 10 seconds due to instruments warm-up.

(5) Ensure cooling water flow is 3.5 L/min or more.
(6) Check that any ALARM/TRIP signal is not indicated.

The motor current is indicated as "00.0 A" on LCD.
When ALARM/TRIP signal is indicated and an abnormal symptom appears, take necessary measures in accordance with attached "Troubleshooting".

[NOTE] ALARM/TRIP signal is kept retained until the RESET signal enters even if the causes are remedied.
After taking necessary measures, either press "RESET" switch on the LCD controller or input the RESET signal through the control connector.
When buzzer mode is in use, buzzer can be stopped by "BUZZER OFF" switch while generating ALARM/TRIP.

(7) open the valve on the exhaust piping before starting the pump.
If an exhaust gas scrubber is provided, open inlet and outlet valve of that.

[CAUTION] If pump is started without opening the valves, exhaust piping is pressurized and causes trouble.

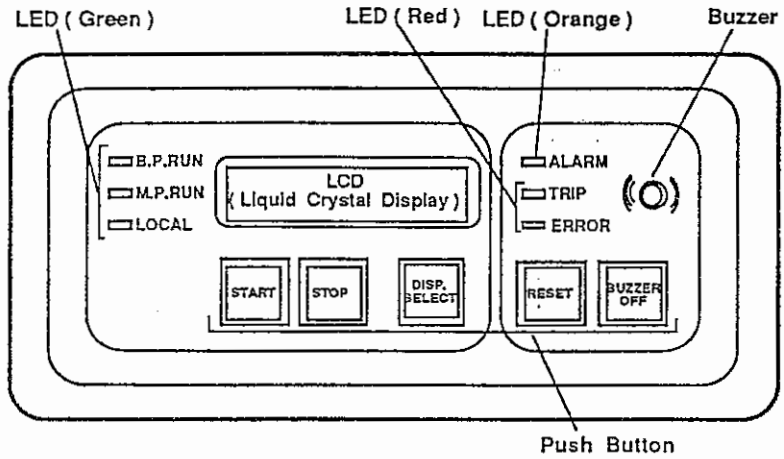

Figure 6.1 LCD controller

Table 6.1 LCD controller indication

No.	ITEM	INDICATION
1.1	Operating Mode Selection 1 (10 sec Count Down)	& & & & & & & % U T Y : S T D R E M : S I G @
1.2	Operating Mode Selection 2 (10 sec Count Down)	& & & & & & & R U N : A L T % B P : A T @
2	Motor Current	B P : # # . # A % M P : # # . # A
3	Cooling Water Flow	W A T E R F L O W % # # . # L / m i n
4	Pump N2 Gas Flow	P U M P N 2 F L O W % # # . # P a m 3 / s
5	Total Operation Time	O P E . T I M E % # # # # # h
6	ALARM / TRIP	$ $ $ $ $: $ $ $ $ $ $ $ % $ $ $ $ $ $ $ $ $ $ $ $ $

1. " &&&&&&& " shows pump unit number.
2. " % " shows present number of ALARM / TRIP.
3. " @ " shows 10 seconds count-down after turning on power.
4. Mode selection contains items below.
   UTY Service observation REM Operation switched to remote
   RUN Remote start signal
   BP BP operation
5. Total operation time displays the operation time integration after shipment from factory.
6. Upper row " $$$$$$ " shows ALARM / TRIP distinction and troubled position. Lower row " $$$$$$ " shows ALARM / TRIP substance.
7. Indication returns to No. 2 if nothing operates for one minute.
8. Indication can be switched with the "DISP. SELECT" switch in order. All present ALARM/TRIP can be indicated with the "DISP. SELECT".

6.2 Operation

Remote / Local switchover and use of the buzzer can be selected at any time as necessary.
Select properly according to the working conditions.
Pump automatically stops when changing to remote mode, if dip switch No. 4 is on.

[WARNING] Do not touch the pump casing and exhaust piping during operation and for some time after stop.
The inflammable must not be touched.
The pump casing and exhaust piping heat very hot.
Do not remove the pump cover during operation.

[CAUTION] Stop the pump after the process gas is stopped and 30 minutes or more elapsed to prevent corrosion and reaction of by-product in the pump.
Purge N2 gas for 1 hour or more after the pump stops to remove the residual process gas inside the pump.
Do not stop the N2 gas for a short period stopping the pump.

[CAUTION] Turn on cooling water for 1 hour or more after stopping because the pump casing temperature remains very hot even after stopping.

[NOTE] Evacuation of the process gas shall only be done 30 minutes or more after starting the pump. However, 4 hours or more is recommendable, since the casing temperature becomes stable at around this time.

[NOTE] While the pump is stopping, if service observation mode is "always", the alarms of cooling water and dilution N2 gas can put out. Pump does not start when ALARM/TRIP is put out.
If started. in such case, "STARTFAIL" is indicated on the LCD controller.

6.2.1 Local (Pump side) Operation

(1) Start

Press controller "START" button.

MP (Main Pump) starts and "M.P.RUN" LED lights.

BP (Booster Pump) then automatically starts and "B.P.RUN" LED lights.

Motor current is indicated on the LCD while pump is running.

For other indications of pump condition, refer to Table 6.1.

(2) Stop

Press controller "STOP" button.

Both MP and BP stop and both "RUN" LED go out.

Motor current is indicated as "00.0 A".

6.2.2 Remote (Distant) Operation

(1) Start

[NOTE] External signal type must comply with dip switch settings.

Input external "MP start" signal from control connector.

MP (Main Pump) starts.

When BP (booster pumps) are in automatic operation, BP automatically starts and stops according to the pump inlet vacuum.

When operating BP by remote signal, input external "BP start" signal from control connector in condition of 1333 Pa (10 Torr) or under.

(2) Stop

[Alternating signal mode]

Turn "MP start" signal off, both MP and BP stop.

[Momentary (Pulse) signal mode]

Input external "MP stop" signal, both MP and BP stop.

6.3 Exhaust Trap Temperature Alarm Setting

[CAUTION] Alarm setpoint of Exhaust trap temperature should be 200 deg C or less.
Gas leakage may happen.

(1) Operate pump 4 hours or more without evacuating process gas.
(2) Check Exhaust trap temperature.
(3) Set alarm temperature by temperature indicator provided on control panel.

[NOTE] Exhaust trap temperature rise differs with process, operation condition , production rate , and maintenance interval.
Upper 10 deg C than Exhaust trap temperature is generally recommendable for an alarm setpoint.

(4) Set protection switch to ON.

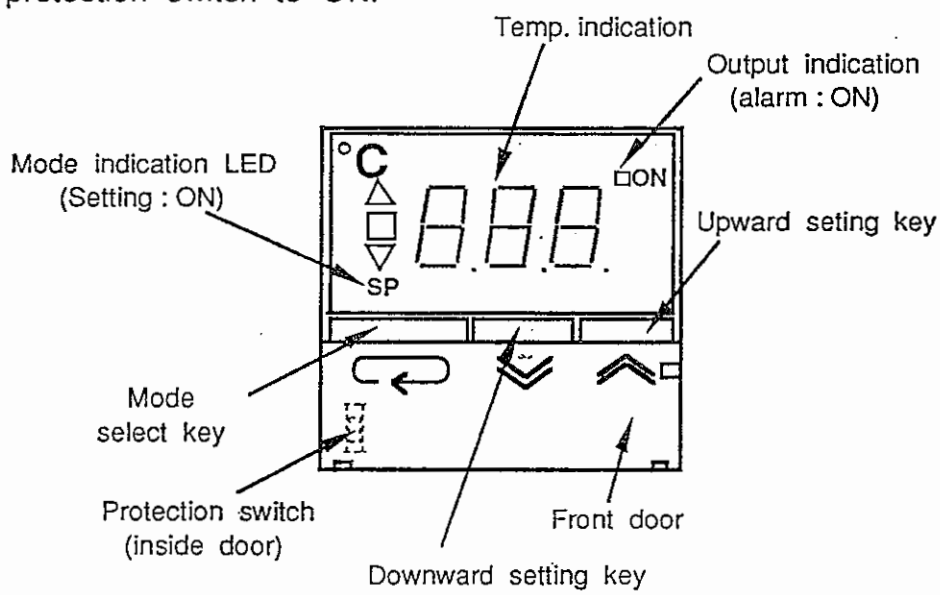

Figure 6.1 Temperature Indicator

7. Maintenance and Overhaul

7.1 Routine Inspection

Check periodically that ALARM signal is not output on the LCD controller or remote output.
If any ALARM/TRIP occur, take necessary measures in accordance with the "Troubleshooting".

[WARNING] Turn power off before starting any work or maintenance.
Do not supply power until work is completed.

[WARNING] Do not touch the pump casing and exhaust piping during operation and for some time after stop.
The inflammable must not be touched.
The pump casing and exhaust piping heat very hot.
Do not remove the pump cover during operation.

[NOTE] ALARM/TRIP signal is kept retained until the RESET signal enters even if the causes are remedied.
After taking necessary measures, either press "RESET" switch on the LCD controller or input the RESET signal through the control connector.
When buzzer mode is in use, buzzer can be stopped by "BUZZER OFF" switch while generating ALARM/TRIP.

[NOTE] Pump does not stop by the ALARM.
However, it kept operated in ALARM state, TRIP or serious troubles may be caused.
Check in accordance with the "Troubleshooting" when the process sequence of one cycle is completed.

[NOTE] Cut external "start" signals before to take necessary measures,. if TRIP occurs during remote operation.
Otherwise, the pump immediately starts when TRIP is reset, if external alternating "start" signal is input.

7.2 Piping Maintenance

[WARNING] Purge sufficient N2 gas before vacuum or exhaust piping removal and washing.
Do not permit inflammable, toxic or dangerous materials to disperse to the surroundings and guard against contact to the human body.
Emergency exit from work site should be provided.

[WARNING] Check for the gas leakage after installing and maintaining the piping.
Discharge of harmful and dangerous substances and abnormal reaction happens by gas leakage.

[CAUTION] Dispose of process by-product should be in accordance with all local and national environmental and safety codes.

Observe the following points when maintaining the vacuum and the exhaust piping, etc.

(1) Purge sufficient N2 gas before vacuum or exhaust piping removal.
(2) If exhaust gas scrubber is provided, stop N2 gas supply and close inlet valve of the exhaust gas scrubber.
(3) Turn off power.
(4) Dry piping completely before reconnecting to the pump.

7.3 Exhaust Trap Maintenance

[WARNING] Purge sufficient N2 gas before maintenance.
Do not permit inflammable, toxic or dangerous materials to disperse to the surroundings and guard against contact to the human body.
Emergency exit from work site should be provided.

[WARNING] Check for the gas leakage after installing and maintenance.
Discharge of harmful and dangerous substances and abnormal reaction happens by gas leakage.

[CAUTION] Dispose of process by-product should be in accordance with all local and national environmental and safety codes.

Observe the following points when maintaining the exhaust trap.
(1) Purge sufficient N2 gas before stopping the pump.
(2) Flow cooling water for 15 minutes or more after stopping.
(3) Stop N2 gas.
(4) Turn off power.
(5) Spread a vinyl seat under the pump unit to avoid floor contamination.
(6) Remove clamp rings and centerrings attached to the exhaust trap.
(7) Remove the exhaust trap.
(8) Clean the exhaust trap.
(9) Dry exhaust trap completely to avoid corrosion before reassembling.
(10) Reassemble exhaust trap with clamp rings, centerrings.

8. Removal and Transportation

[DANGER] Keep out from under the lifted pump.
Only qualified personal shall be allowed to lift the pump.

[WARNING] Notify EBARA before the pump is returned if toxic or hazardous gases such as arsenic compound has been evacuated.
For safety of pump transportation and overhaul works, inform the name of equipment, process gas, and process by-product, and reason for return.

Please observe the following procedures when sending back the used pumps to EBARA.

(1) Fully replace the residual gas inside the pump with N2 gas.
(2) Remove electrical wiring.
(3) Shut the N2 regulator and remove N2 gas piping.
Plug the N2 purge port with seal or the like.
(4) Remove cooling water piping and fully drain the residual water by pushing the puppet located in the center of the coupler.
(5) Remove vacuum and exhaust piping and completely close the pump suction port and exhaust port with a blind flange or the like.
Plug all such places as differential port, etc. where process gas may flow out.
(6) Set LCD controller panel downward and fix the controller to the pump cover by using adhesive tape.
(7) Fully pack the pump proper with a vinyl sheet, etc.

[WARNING] Use an appropriate wire rope and crane which match respective pump weight.
Angle of wire ropes must be equally divided to the left and right, otherwise the pump can be hoisted eccentrically.

(8) Use eyebolts for loading or unloading of the pump.
The bearing surface of the eyebolts must be placed in uniform and close contact with the attaching face.
The angle of the sling wire (angle between wire) shall be 60° or less.

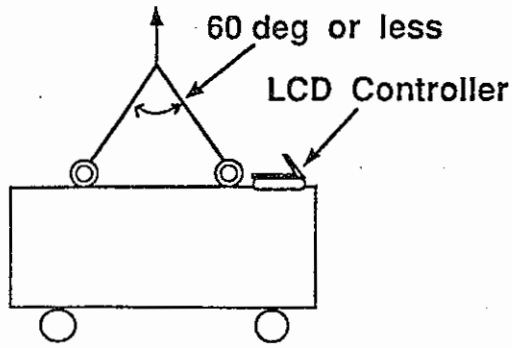

Figure 8.1 Pump Lifting

(9) If an optional interface box or the like are provided, be careful to not make wires hit them.

(10) Before transportation, fully lower adjuster feet beyond casters.

Place protective members besides protection rug in between fixing wires and pump cover to avoid load concentration.

9. Troubleshooting

9.1 Troubleshooting (1) Basic trouble

Abnormal symptom	Check Item	Corrective Action
ELB is impossible to make it On. (leakage detector is activated)	Incorrect wiring Short circuit in internal wiring	Check wiring. Replace or overhaul pump.
Power LED does not come on.	No power supply to pump Power connector is not connected. Lamp bulb is in failure.	Check power supply. Connect power connector. Replace lamp bulb.
Nothing appears on LCD. Display is abnormal.	ELB is not made On. Instruments are in failure.	Make ELB on. Replace instruments.
Pressing START button of controller does not start MP.	Instruments are in failure. Start-up conditions are not satisfied. ("STARTFAIL" is displayed.) Operation mode is set in "Remote".	Replace instruments. Satisfy all start-up conditions. Set dip switch to "Local" mode.
BP does not start up	Leakage on vacuum piping MP insufficient vacuum BP start signal is not applied Instruments failure	Check piping Replace or overhaul Input BP start signal Replace instruments
Abnormal noise Excessive vibration	Rubber vibration isolator is not lowered enough. Pump cover is in contact with other objects. Pump cover mounting screws loosened. Instruments are in failure.	Properly set all rubber isolator. Remove other objects from pump cover. Screw mounting screws. Replace or overhaul pump.

Vacuum pressure increase.	By-Products settled on inside of vacuum piping.	Clean up piping.
	N2 purge pressure is setting too high.	Set purge pressure for correct value.
	Leakage from vacuum piping	Check piping and take necessary measures.
	By-Products settled on inside of pump casing.	Replace or overhaul pump.

[WARNING] Turn power off before starting any work or maintenance.
Do not supply power until work is completed.

[WARNING] Do not touch the pump casing and exhaust piping during operation and for some time after stop.
Do not remove the pump cover during operation.

[WARNING] Check for the gas leakage after installing and maintaining the piping.

9.2 Troubleshooting (2) ALARM

Display	Symptom	Check Item	Corrective Action
ALARM:WATER FLOW LOW ##.#	Cooling water flow decreases.	Cooling water coupler is disconnected.	Connect coupler.
		Water supply pressure is not sufficient.	Apply sufficient pressure.
		Valve is closed.	Open valve.
		Water piping is clogged.	Clean or replace cooling water piping.
		Faulty instrumentation	Replace instruments.
ALARM:PUMP N2 FLOW LOW ##.#	Shaft sealing N2 flow decreases.	N2 purge port is not connected.	Connect N2 pipe joint.
		Primary pressure is insufficient.	Apply sufficient pressure.
ALARM:EXH. N2 FLOW LOW ##.#	Diluting N2 flow decreases.	Secondary pressure of regulator is set too low.	Increase pressure setting.
		N2 piping is clogged.	Replace N2 piping.

After taking the above corrective actions, input RESET signal or push RESET button. When ALARM cause remains, RESET is not accepted.

[WARNING] Turn power off before starting any work or maintenance.
Do not supply power until work is completed.

[WARNING] Do not touch the pump casing and exhaust piping during operation and for some time after stop.
Do not remove the pump cover during operation.

[WARNING] Check for the gas leakage after installing and maintaining the piping.

ALARM:MP. MOTOR CURRENT HIGH	MP motor current value rises.	Pump exhaust pressure rises.	Check exhaust piping.
		Rotor is in contact.(gas temperature rise due to by-products)	Replace or overhaul pump.
		Rotor is in contact. (inclusion of foreign substance)	Replace or overhaul pump.
ALARM:BP MOTOR CURRENT HIGH	BP motor current value rises.	Rotor is in contact (gas temperature rise due to water flow decrease)	Increase cooling water flow slowly.
		Rotor is in contact.(gear or bearing is damaged)	Replace or overhaul pump.
		Abnormal voltage	Check power supply.
ALARM: EXH. TRAP TEMP HIGH	Exhaust Trap temperature rises.	Exhaust Trap temperature rise due to by-products	Replace or overhaul pump
			Replace or clean Exhaust trap
		Pump exhaust pressure rises.	Check exhaust piping.
ALARMBP-GEAR OIL LEVEL LOW	BP gear side oil level low	Decrease of oil	Fill the lubricating oil.
		Insufficient sealing N2	Check sealing N2 ALARM
ALARM:BP-MOTOR OIL LEVEL LOW	BP motor side oil level low	Pump is inclined.	Level the pump with adjusting rubber isolator.
ALARM:MP-GEAR OIL LEVEL LOW	MP gear side oil level low	Instruments are in failure.	Replace instruments.
ALARM:MP-MOTOR OIL LEVEL LOW	MP motor side oil level low		
ALARM:PUMP BOX TEMP HIGH	Temperature in pump cover rises.	Duct ventilations not insufficient .	Ventilate sufficient air from duct.
		Gas temperature rise due to cooling water decrease.	Increase cooling water flow slowly.

ALARM:CASING TEMP HIGH	Casing temperature rises.	Exhaust press. rises.	Check exhaust piping.
		Duct ventilations not insufficient.	Ventilate sufficiently.
		By-product is clogged.	Replace or overhaul pump.

After taking the above corrective actions, input RESET signal or push RESET button. When ALARM cause remains, RESET is not accepted.

[WARNING] Turn power off before starting any work or maintenance. Do not supply power until work is completed.

[WARNING] Do not touch the pump casing and exhaust piping during operation and for some time after stop. Do not remove the pump cover during operation.

[WARNING] Check for the gas leakage after installing and maintaining the piping.

9.3 Troubleshooting (3) TRIP

Display	Symptom	Check Item	Corrective Action
TRIP:CASING TEMP H. HIGH	Pump casing temp. rises.	Exhaust press. rises.	Check exhaust piping.
		By-product is clogged.	Replace or overhaul pump.
		Duct ventilations not insufficient.	Ventilate sufficiently.
TRIP:BP MOTOR TEMP HIGH	BP motor temperature rises.	Cooling water flow decreases.	Re-start pump after cooling sufficiently.
		Motor is in failure.	Replace or overhaul pump.
TRIP:MP MOTOR TEMP HIGH	MP motor temperature rises.		
TRIP:BP MOTOR OVERLOAD	BP current rises. (thermal relay trip)	Pump exhaust pressure rises.	Check exhaust piping.
		Rotor in contact (gas temperature rise due to by-products)	Replace or overhaul pump.
TRIP:MP MOTOR OVERLOAD	MP current rises. (thermal relay trip)	Rotor is in contact . (inclusion of foreign substance)	Replace or overhaul pump.
		Instruments are in failure.	Replace instruments.
TRIP: PHASE ERROR	Negative phase	Incorrect wiring.	Wire R/S/T correctly.
		Instruments are in failure.	Replace instruments.
TRIP: PHASE ERROR	Open phase	Incorrect wiring.	Check power supply.
		Power failure (500 msec or more) during operation	Check power supply.

TRIP:STARTFAIL ALARM/TRIP EXIST	Start fault	Starting while ALARM or TRIP occurs.	Satisfy all starting conditions.
TRIP:BP MOTOR NO CURRENT	BP motor Current value is 0.	Power failure (500 msec or more) during operation	Check power supply.
TRIP:MP MOTOR NO CURRENT	MP motor Current value is 0.	Instruments are in failure.	Replace instruments.

After taking the above corrective actions, input RESET signal or push RESET button. When TRIP cause remains, RESET is not accepted. Before resetting, cut external START signal in remote operation.

[WARNING] Turn power off before starting any work or maintenance. Do not supply power until work is completed.

[WARNING] Do not touch the pump casing and exhaust piping during operation and for some time after stop.
Do not remove the pump cover during operation.

[WARNING] Check for the gas leakage after installing and maintaining the piping.